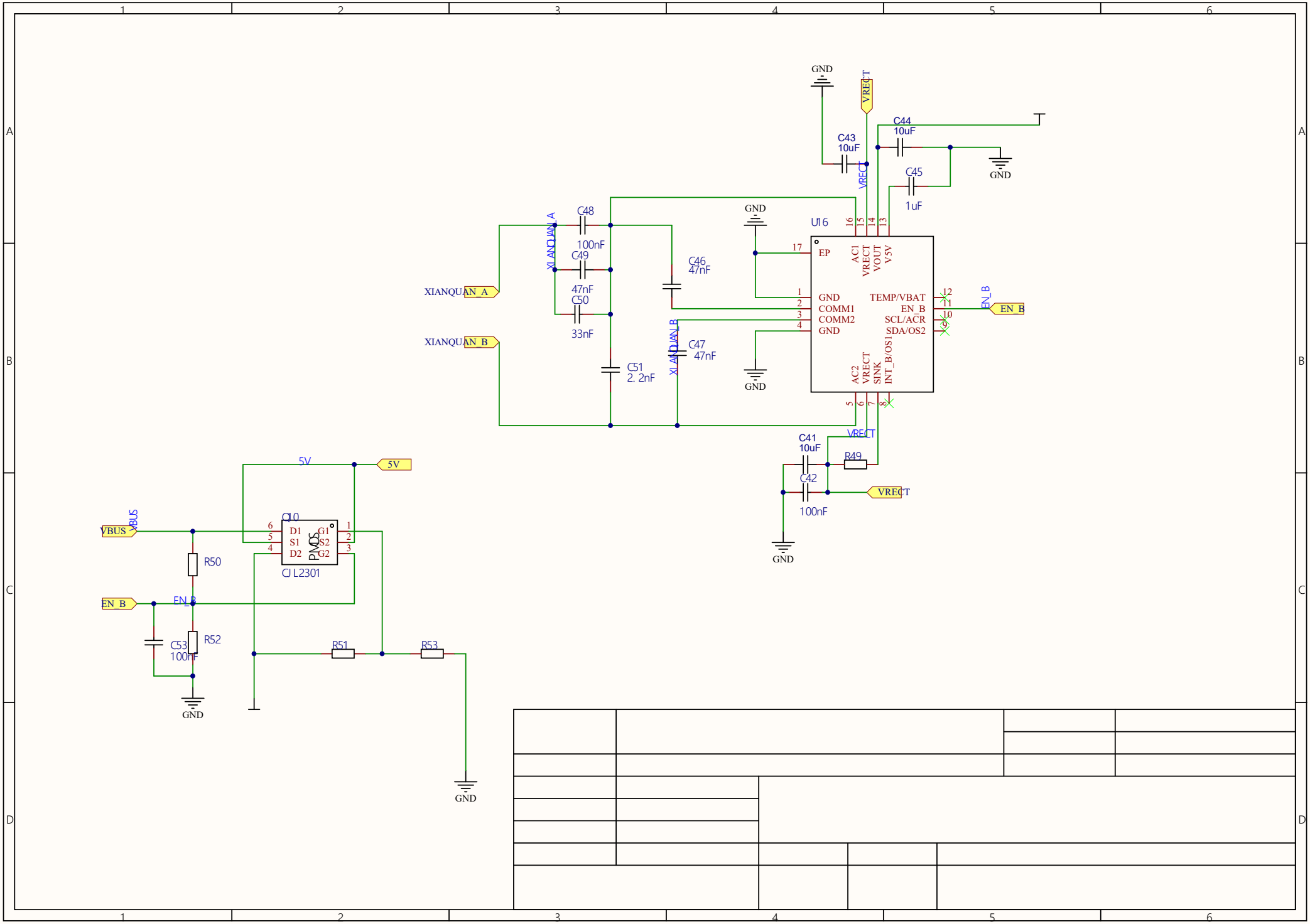
GND
VRECT
C43
10uF
C44
10uF
C45
1uF
U16
EP
AC1
VRECT
VOUT
V5V
GND
COMM1
COMM2
TEMP/VBAT
EN_B
SCL/ACR
SDA/OS2
AC2
SINK
INT_B/OS1
C48
100nF
C49
47nF
C50
33nF
C46
47nF
C47
47nF
C51
2. 2nF
XIANQUAN_A
XIANQUAN_B
C41
10uF
R49
C42
100nF
5V
VBUS
Q10
D1
S1
D2
G1
S2
G2
PMOS
CJ L2301
R50
R52
C53
100nF
R51
R53